Advanced Topics in Software Engineering (02265)

Ekkart Kindler

DTU Compute
Department of Applied Mathematics and Computer Science

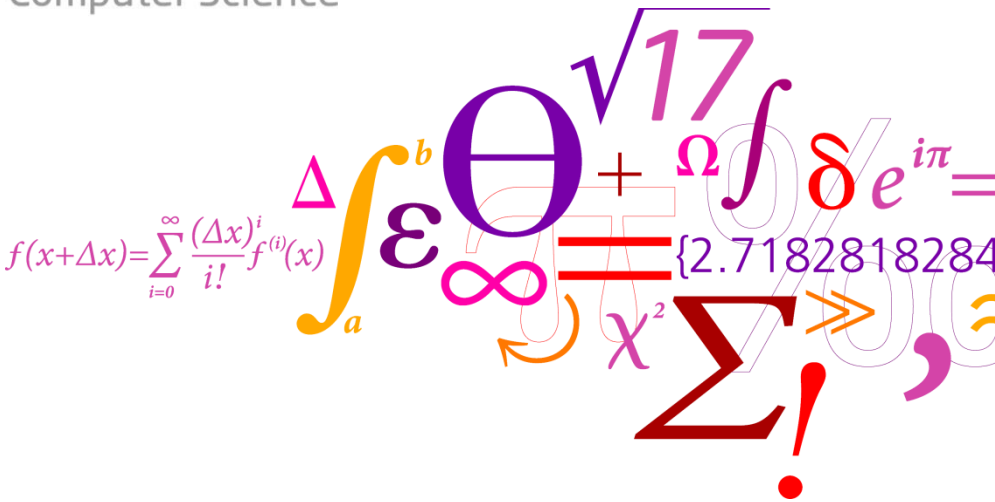

VI. Modelling Behaviour

This is one of the most relevant, most interesting, and most challenging issues in modelling today!

1. Behaviour in UML

DTU Compute
Department of Applied Mathematics and Computer Science
Ekkart Kindler

In UML, there are different concepts and diagrams that concern behaviour modelling

- Use case diagrams
- Activity diagrams
- Interaction diagrams
  - Sequence diagrams
  - Communication diagrams
- State machine diagrams (State Charts)
- Methods of classes (MOF: Operation)
  (in combination with OCL, the input/output relation of a method can be specified)

Use cases talk about functionality, which is "behaviour on a high level of abstraction"; they are not very concrete; but a use case can be associated with other behaviour diagrams with a more detailed description of the behaviour.

Activity diagrams

DTU Compute
Department of Applied Mathematics and Computer Science
Ekkart Kindler

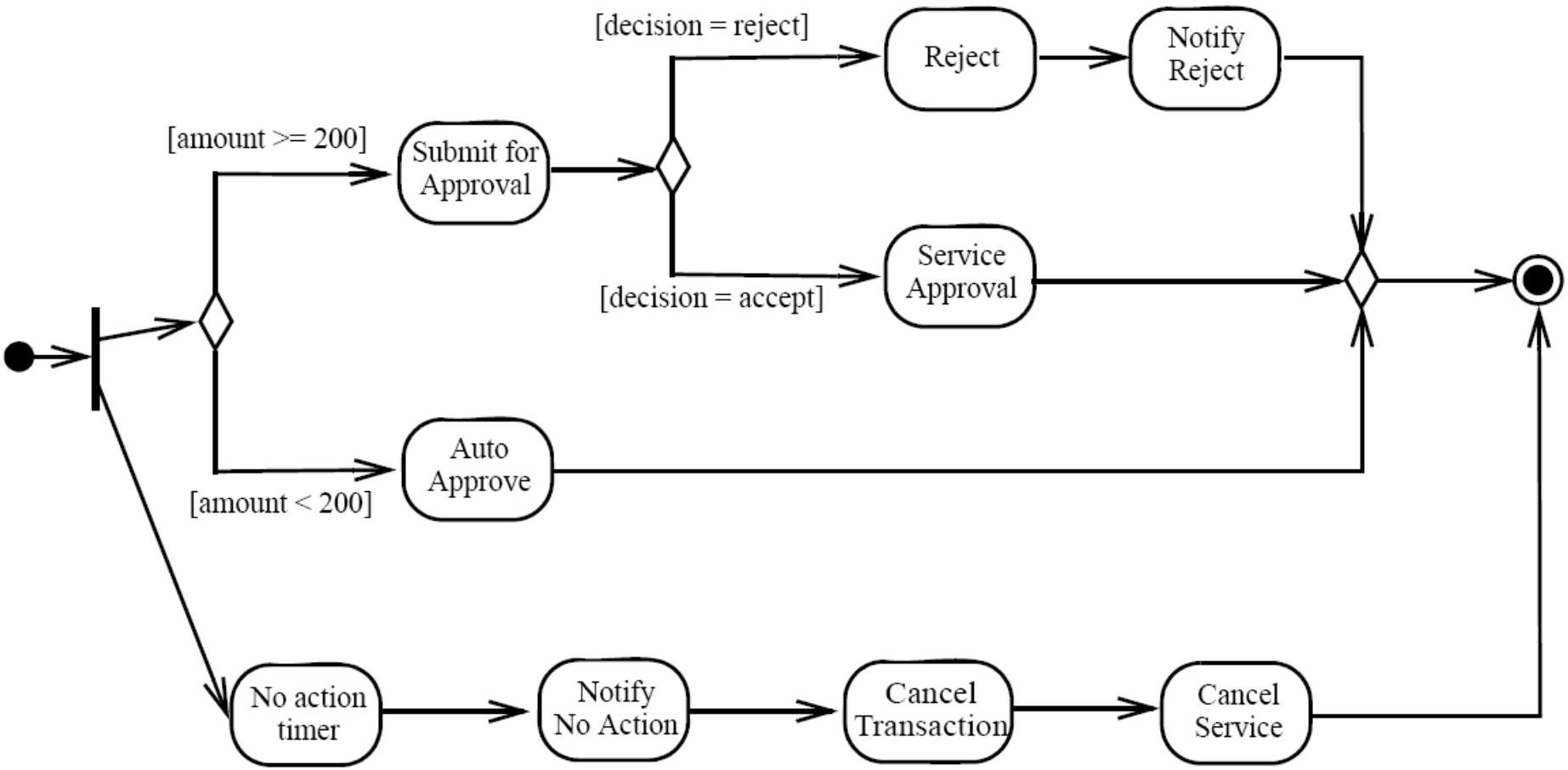

From: OMG Unified Modeling Language (OMG UML), Superstructure, V2.1.2, November 2007, p. 331

“Sequence Diagram”

DTU Compute
Department of Applied Mathematics and Computer Science
Ekkart Kindler

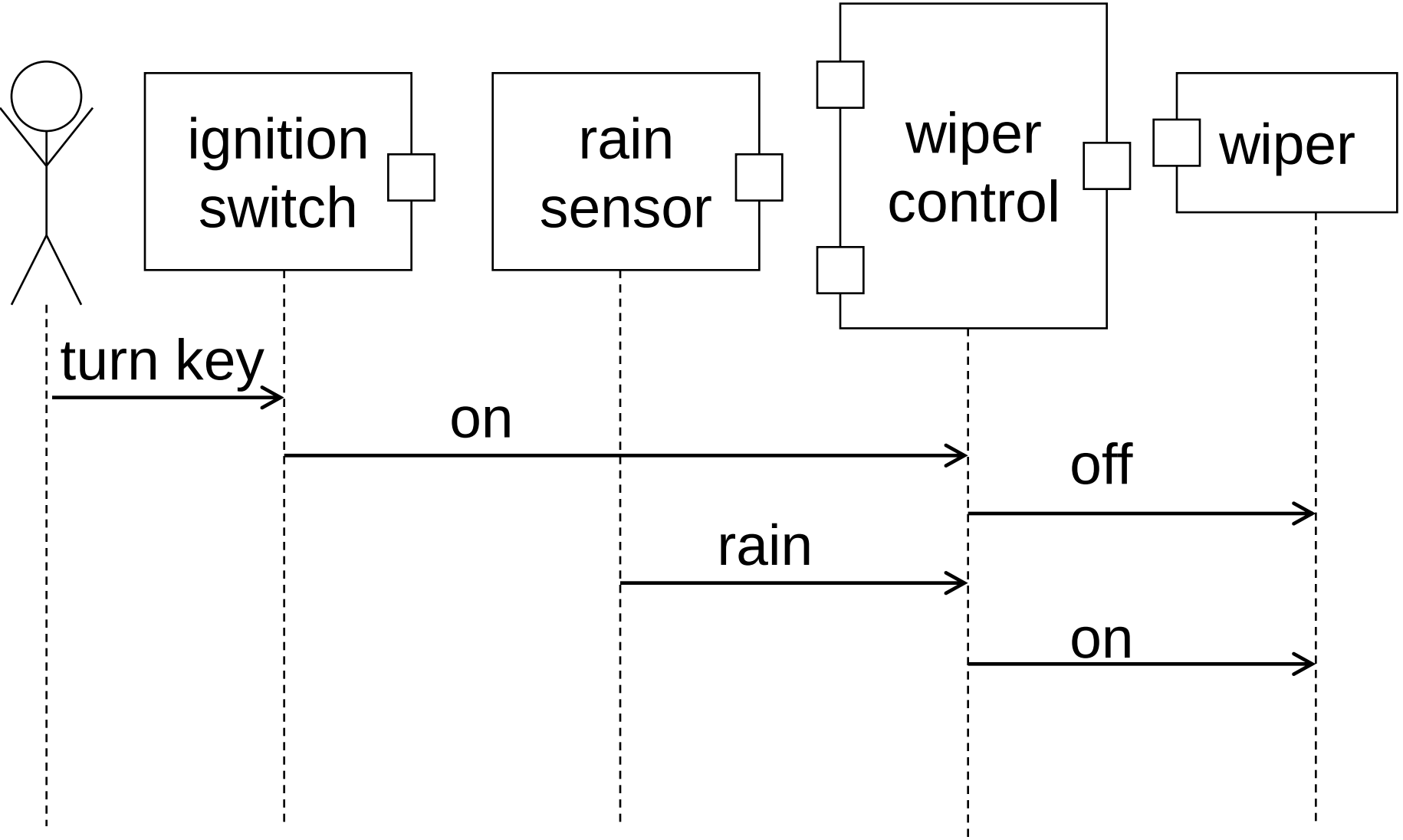

”Communication Diagram”

DTU Compute
Department of Applied Mathematics and Computer Science
Ekkart Kindler

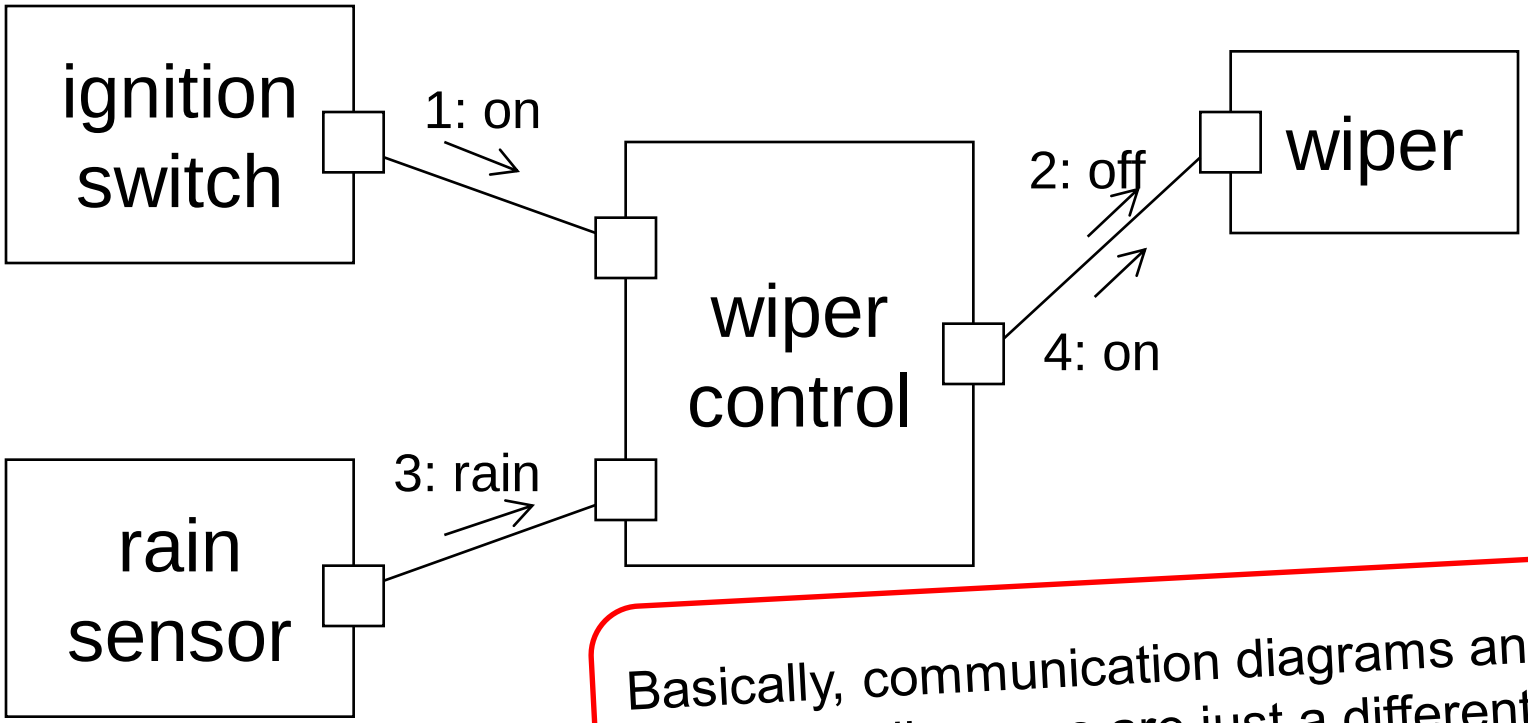

Basically, communication diagrams and sequence diagrams are just a different representation of the same concepts.

Sequence diagram (details)

DTU Compute
Department of Applied Mathematics and Computer Science
Ekkart Kindler

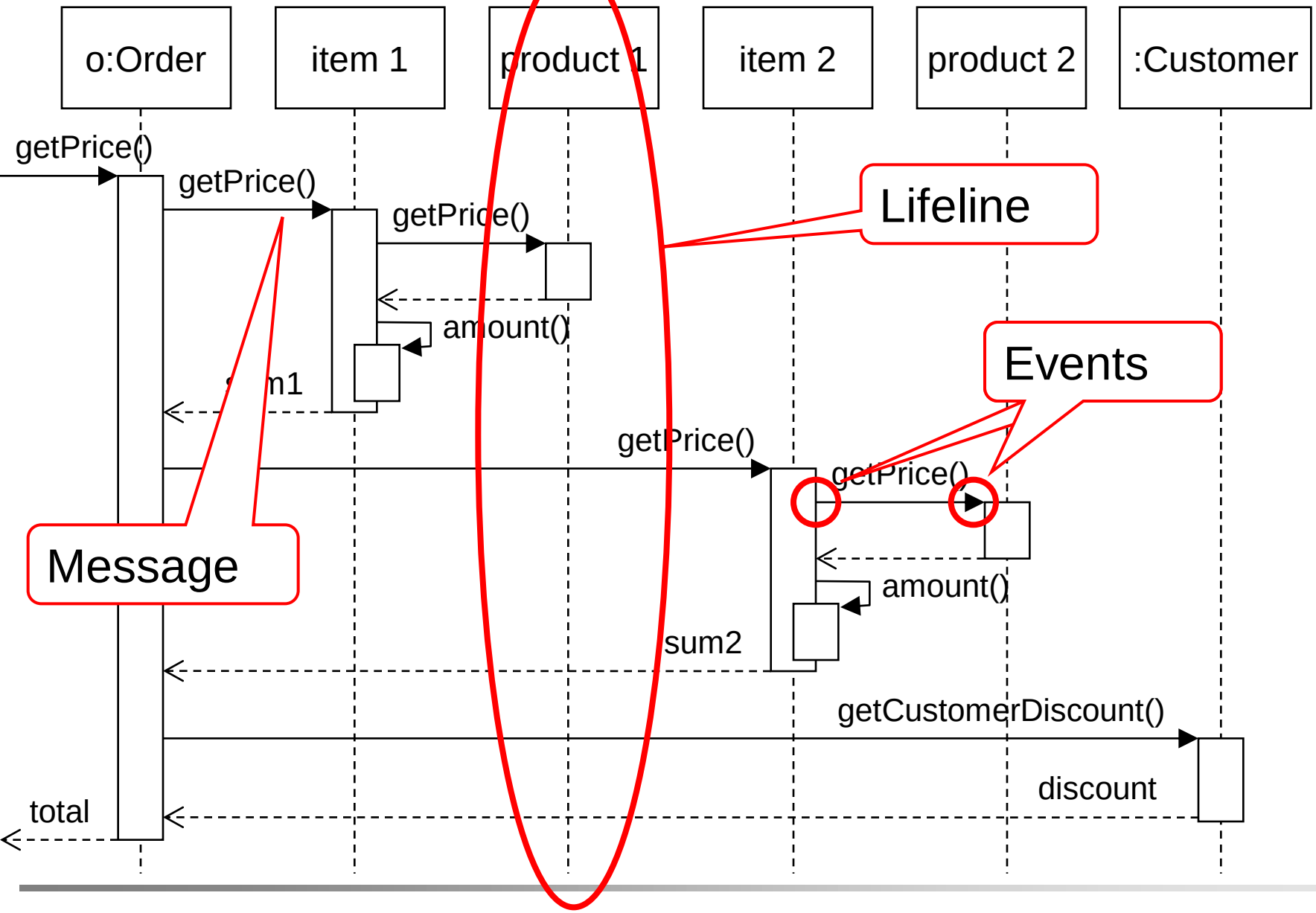

Sequence diagram (details)

DTU Compute
Department of Applied Mathematics and Computer Science
Ekkart Kindler

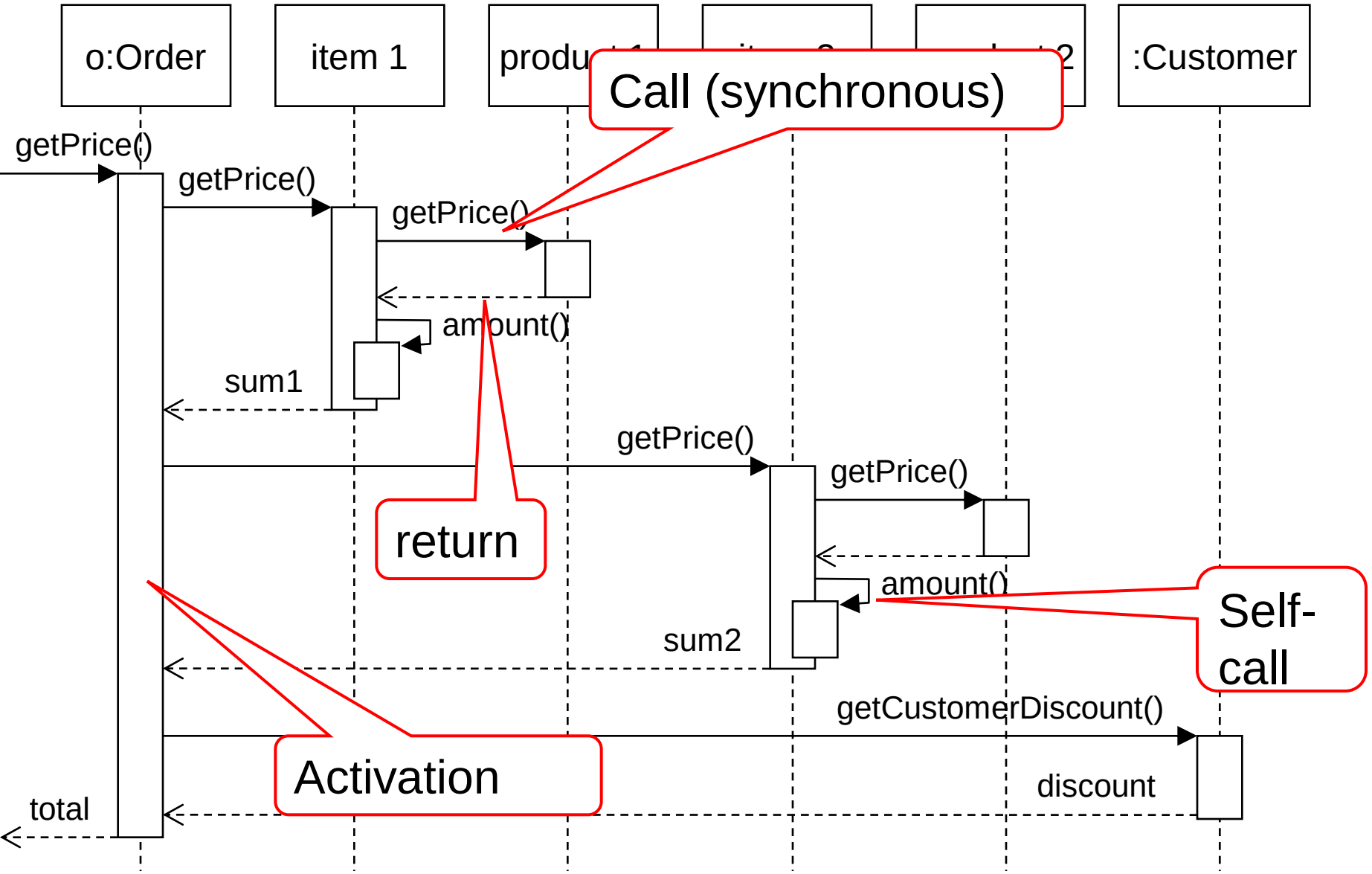

“State machines”

DTU Compute
Department of Applied Mathematics and Computer Science
Ekkart Kindler

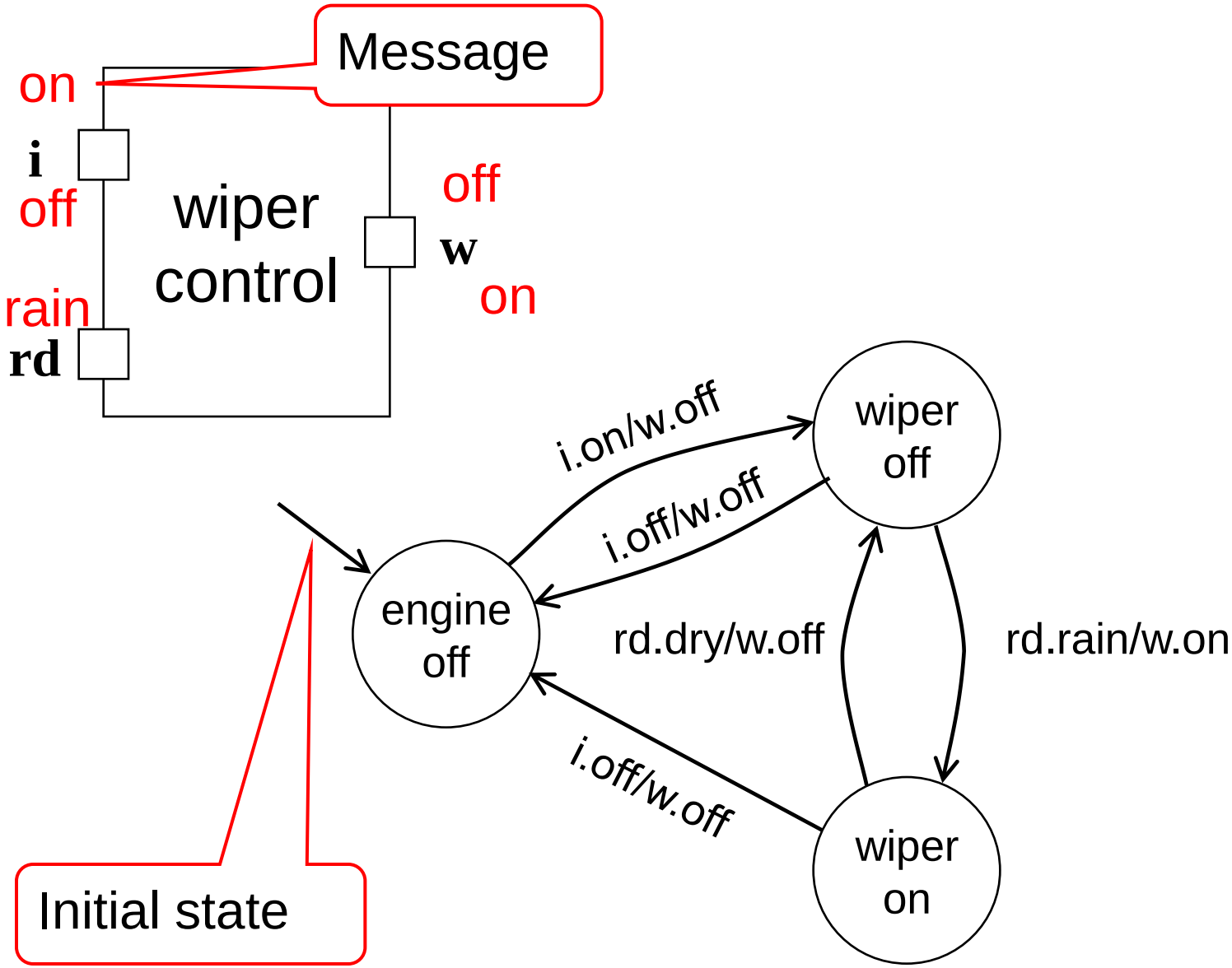

Use of state machines

DTU Compute
Department of Applied Mathematics and Computer Science
Ekkart Kindler

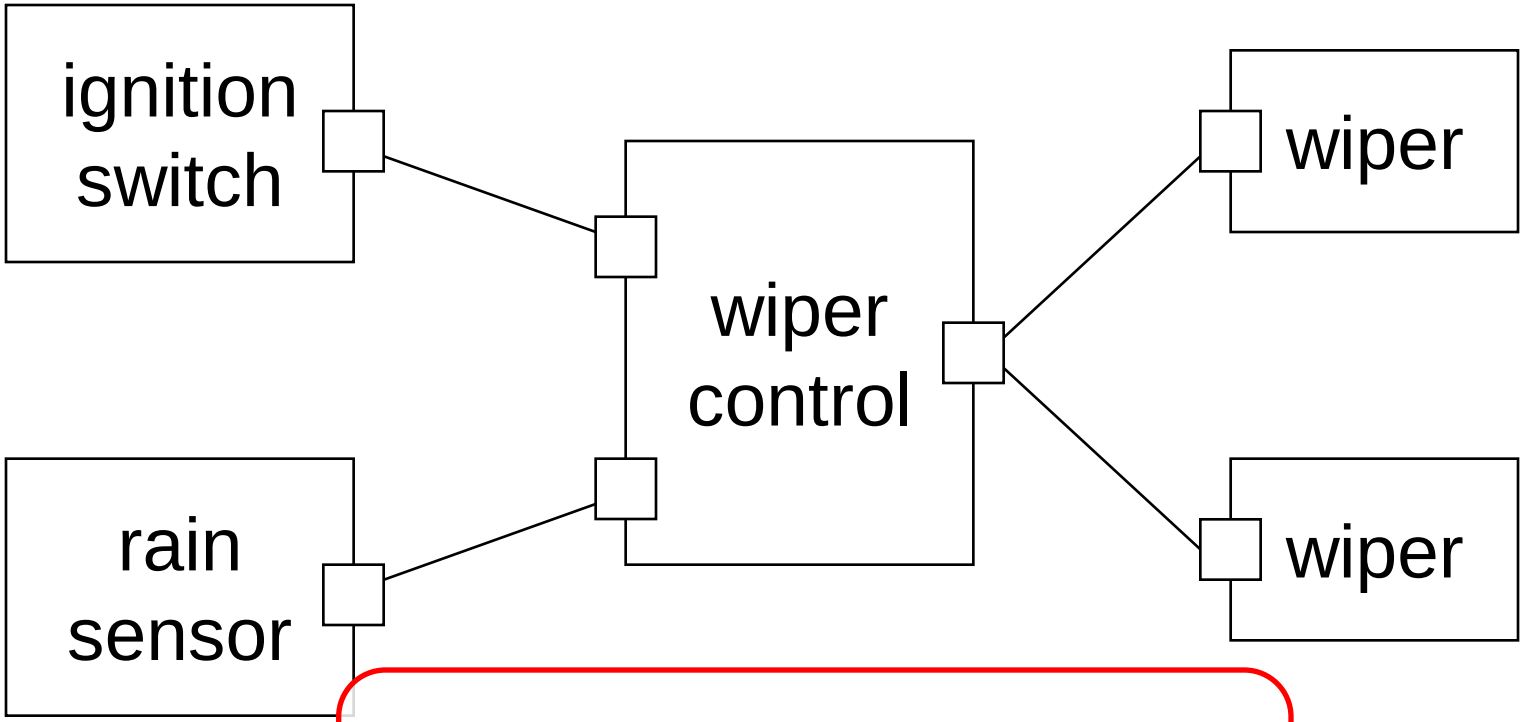

One automaton for each component (plus structure) defines the complete behaviour of our “wiper system”.

“State machines”

DTU Compute
Department of Applied Mathematics and Computer Science
Ekkart Kindler

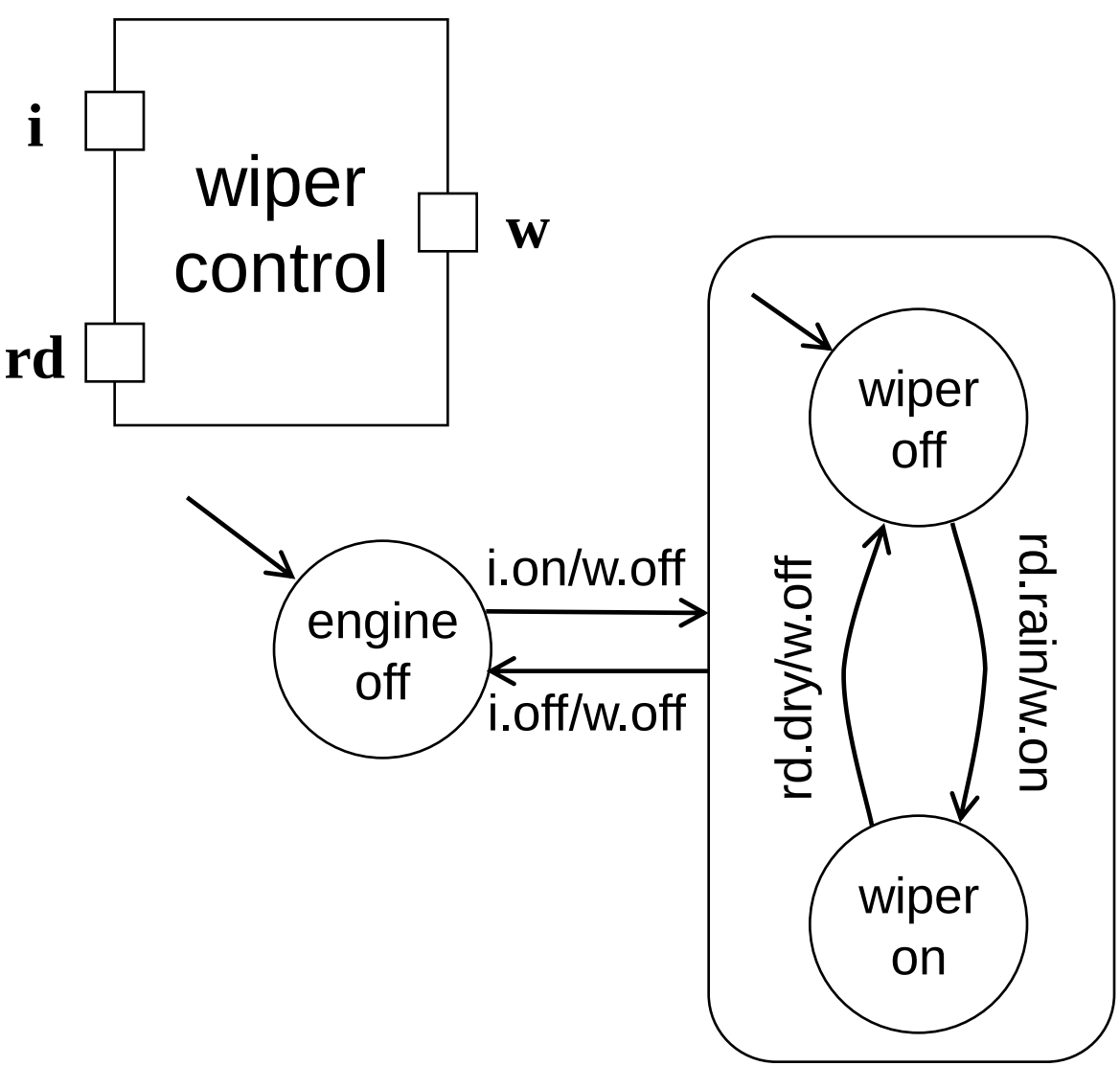

Complex state

State machines (automata) come in many different flavours and with many different semantics.

Behaviour in UML

DTU Compute
Department of Applied Mathematics and Computer Science
Ekkart Kindler

- Use case diagrams
- Activity diagrams
- Interaction diagrams
  - Sequence diagrams
  - Communication diagrams
- State machine diagrams (State Charts)
- Methods of classes
  (in combination with OCL, the input/output relation of a method can be specified)

Discuss:
→Why so many?
→What is their purpose?

2. Other behaviour models

DTU Compute
Department of Applied Mathematics and Computer Science
Ekkart Kindler

Just to give a rough idea of the many concepts and notations out there

- Kripkestructures / Transition systems
- Petri nets
- Story Pattern (”Programming in Pictures”)
- Process algebras (synchronisation of events)
- Event-driven Process Chains (EPCs), BPMN, ...
- BPEL, WSDL

We will come back to that in Sect. 3.

That is already quite close to programming!

Example: Material Flow System

DTU Compute
Department of Applied Mathematics and Computer Science
Ekkart Kindler

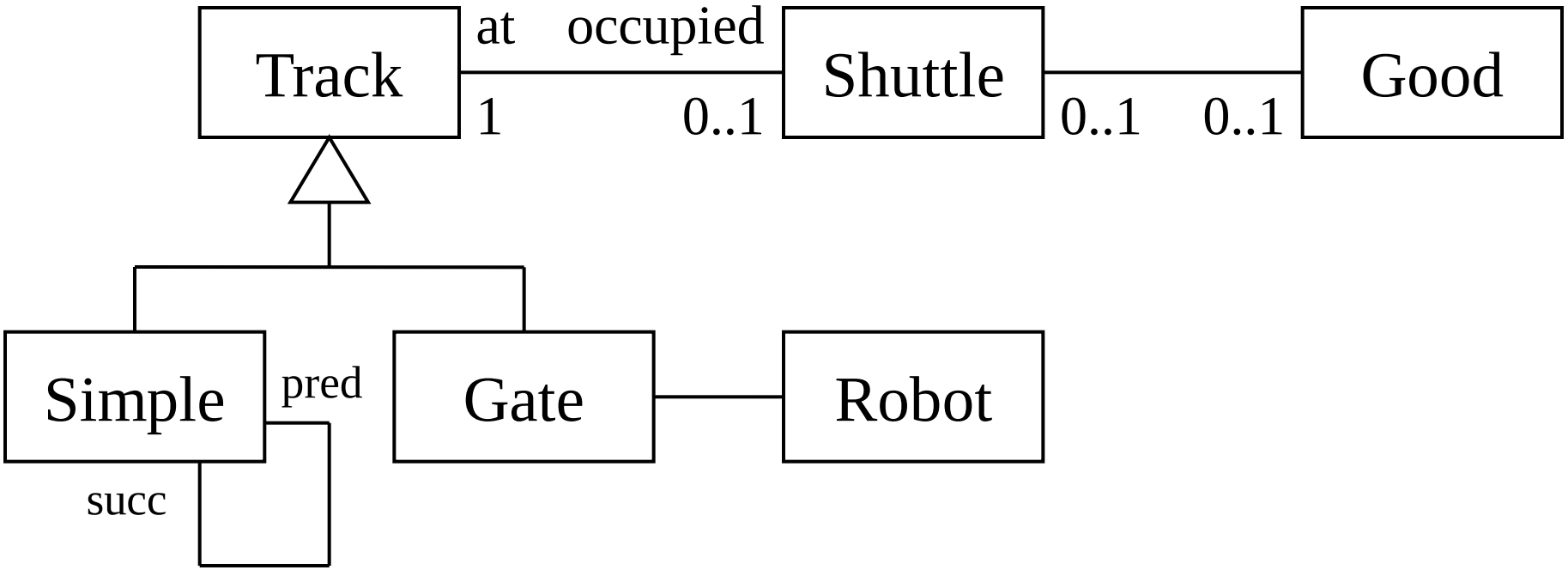

An Instance

DTU Compute
Department of Applied Mathematics and Computer Science
Ekkart Kindler

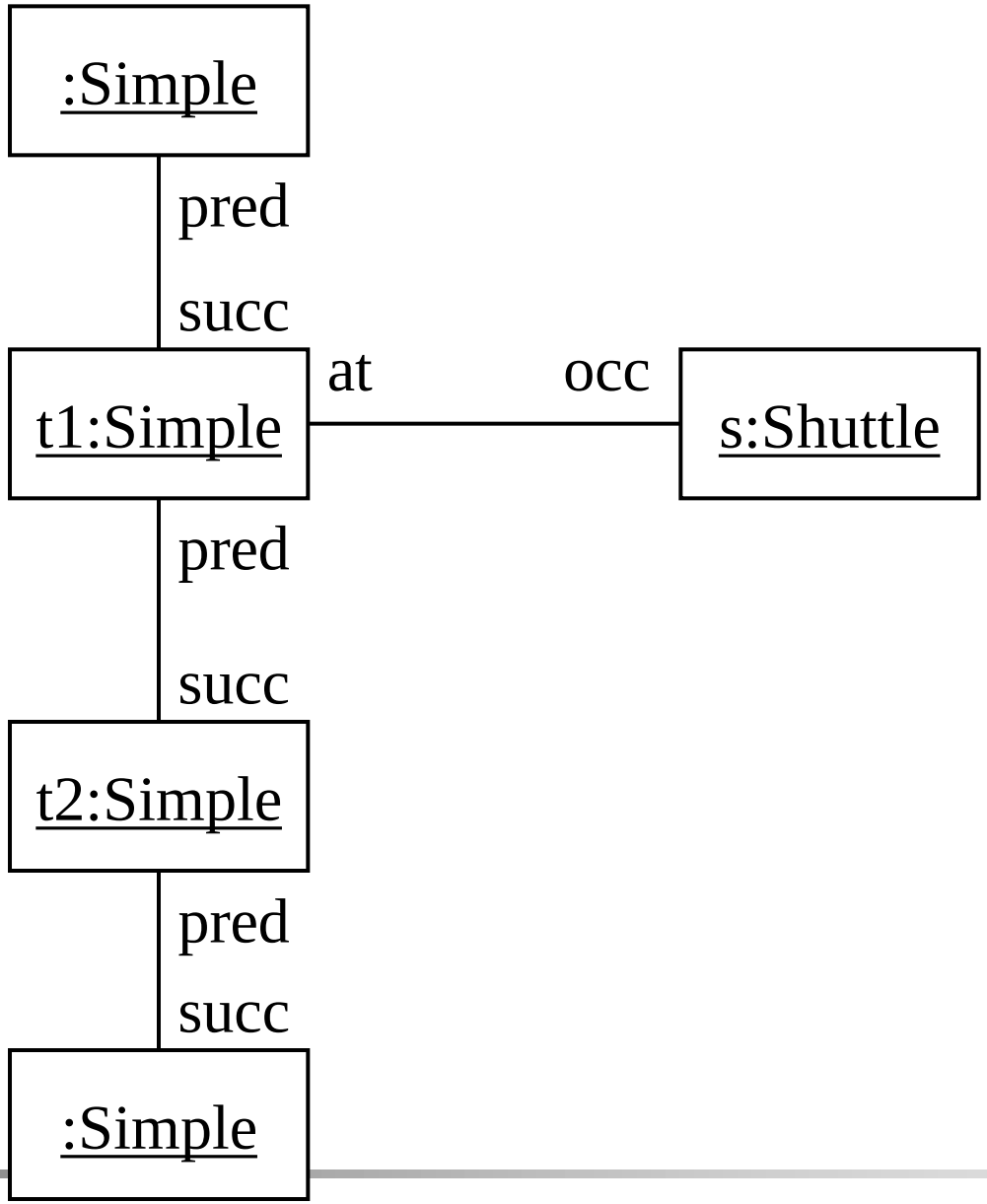

Behaviour

DTU Compute
Department of Applied Mathematics and Computer Science
Ekkart Kindler

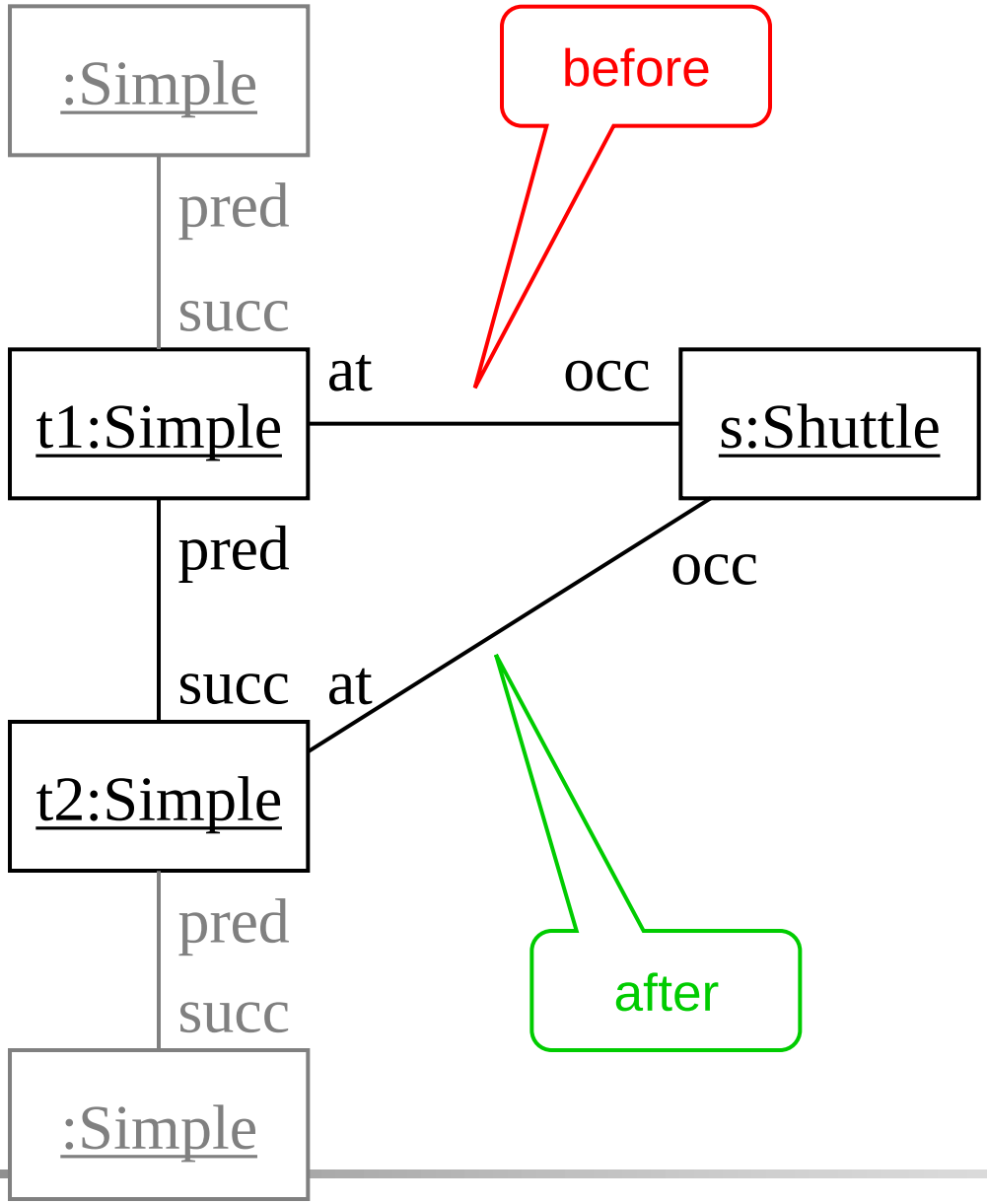

Story Pattern

DTU Compute
Department of Applied Mathematics and Computer Science
Ekkart Kindler

This is the idea of graph grammars again (which we used in transformations).

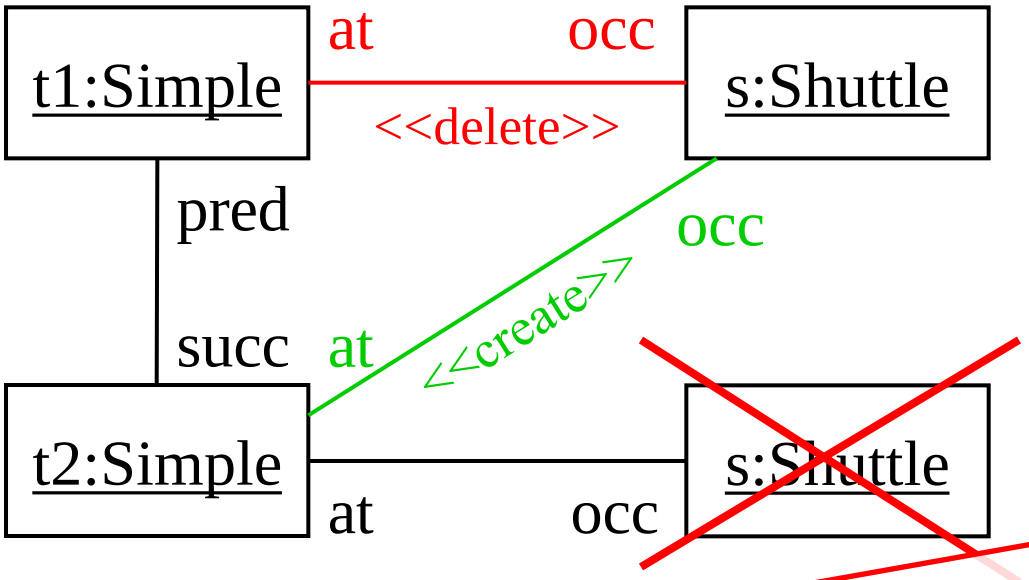

Such story patterns can be combined with activity diagrams for more complex behaviour: Story diagrams

EPC: Business Trip

DTU Compute
Department of Applied Mathematics and Computer Science
Eldert Kindler

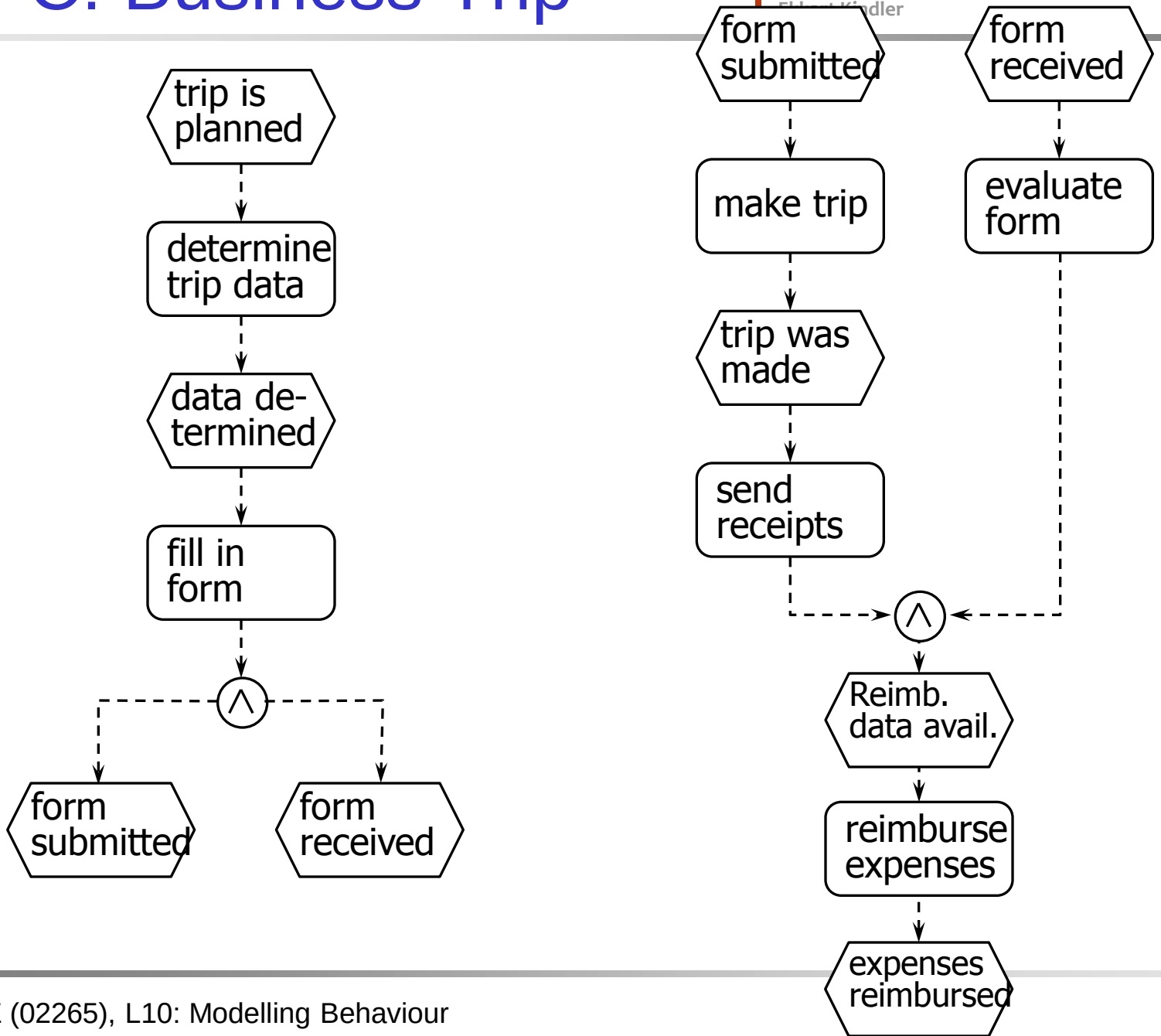

EPC Constructs

DTU Compute
Department of Applied Mathematics and Computer Science
Ekkart Kindler

- **Event**:
  Indicates the **entry** into a specific state

Unfortunately, often abused for the state itself!

- **Function**:
  An action

- **Flow of control**:
  between functions and events (only)

- **Connectors**:
  define split and join of the flow of control

Purpose of EPCs and activity diagrams is very similar (see Sect. 3).

Synchronisation of events

DTU Compute
Department of Applied Mathematics and Computer Science
Ekkart Kindler

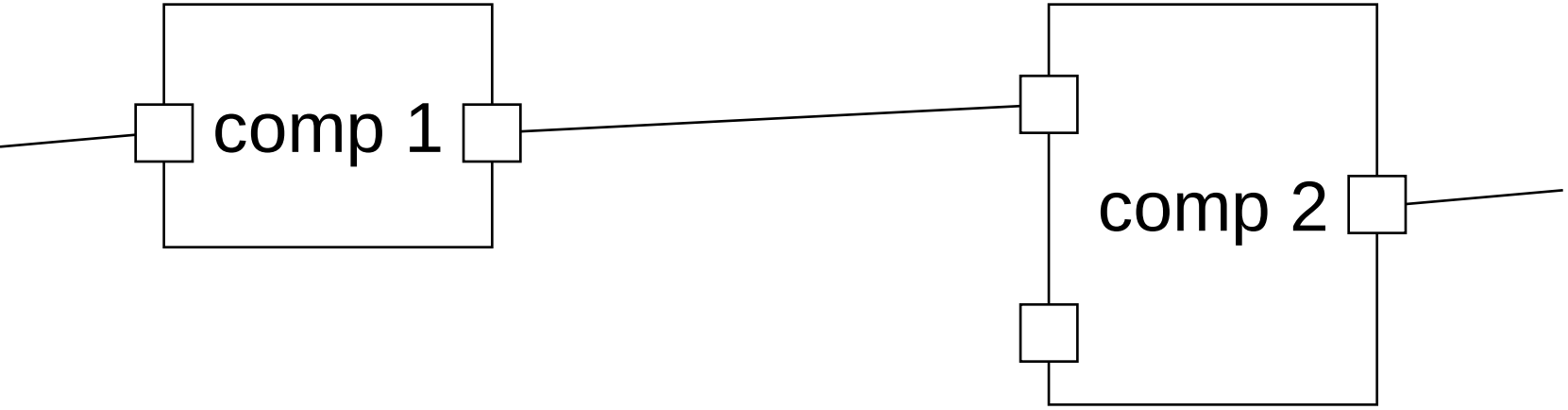

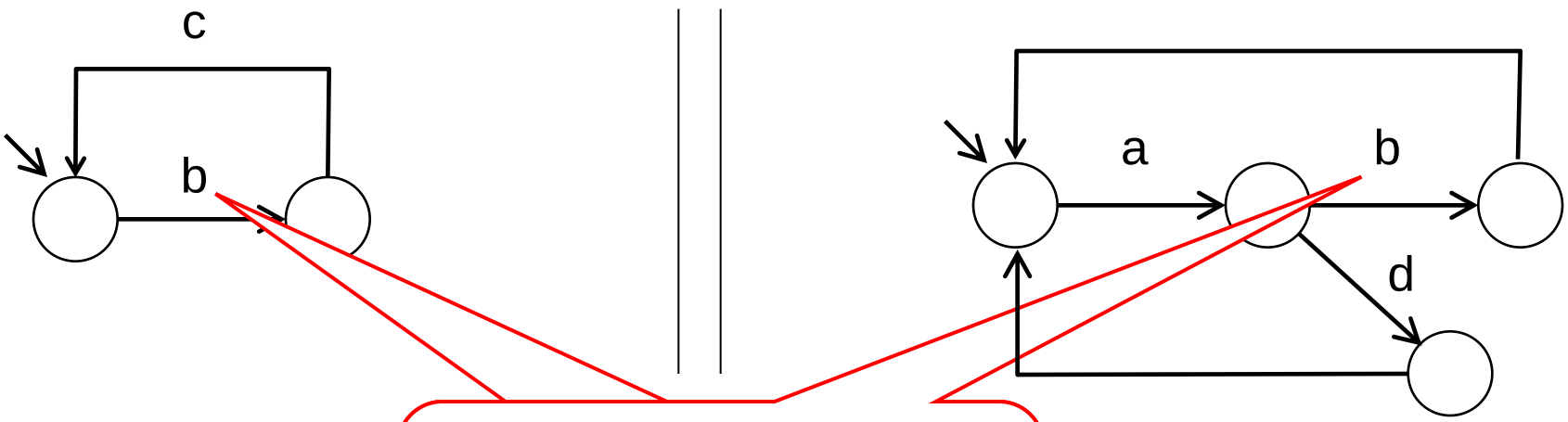

These two events (actions) can only be executed together (atomic synchronous execution)

Synchronisation of events

Note: Do not confuse synchronisation of events with synchronous messages in sequence diagrams

- The concept of event synchronisation is featured by process algebras (in different flavours)
- Event synchronisation makes events of different automata happen atomically

What does atomic mean?

→ ACID

- This allows to coordinate behaviour of different parts of a system on a higher level of abstraction

We will come back to that later. → ECNO

3. Business Processes

DTU Compute
Department of Applied Mathematics and Computer Science
Ekkart Kindler

- Businesses processes are at the core of a business
- Business processes are one of the main assets of an enterprise
- Information systems and in particular ERP systems must support these processes

➔ Therefore, business processes are essential for developping (or customizing) IT support for such enterprises

Example: Business trip

DTU Compute
Department of Applied Mathematics and Computer Science
Ekkart Kindler

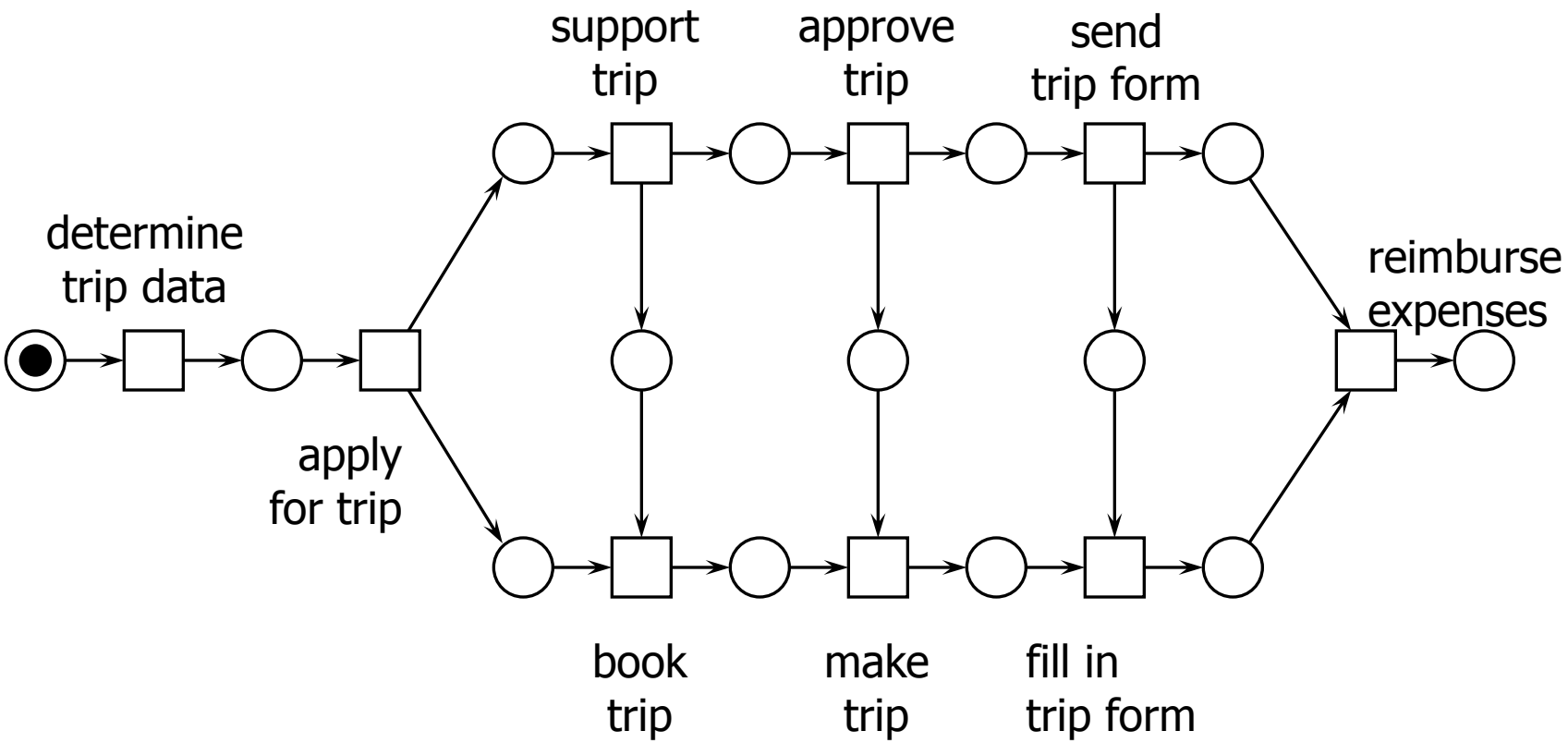

Business process

DTU Compute
Department of Applied Mathematics and Computer Science
Ekkart Kindler

A **business process** consists of a collection of *activities* that are executed in some enterprise or administration according to certain rules and with respect to certain goals.

A **workflow** is the realization/implementation of a business process by some information system.

Examples

- Business trip
- Hospital information system
  - Patient registration
  - Special physical examination of a patient
  - Complete stay of a patient
- Facility management
  - apply for the construction of a new building
- Production
  - Air plane construction
- ...

Observations

1. Business processes can take quite different time: from a few seconds to several months or even years.

Slogan from transaction theory:
„Workflows are **long-lived transactions**"

Observations

2. A business process can be composed from other business processes.

Slogan from transaction theory:
„Workflows are **nested transactions**"

Observations

DTU Compute
Department of Applied Mathematics and Computer Science
Ekkart Kindler

3. The order of activities is fully defined in some examples; in other examples, there is only a vaguely defined order.

   In some examples, the order is not defined at all; maybe, not even the possible activities are defined.

Our example revisited

DTU Compute
Department of Applied Mathematics and Computer Science
Ekkart Kindler

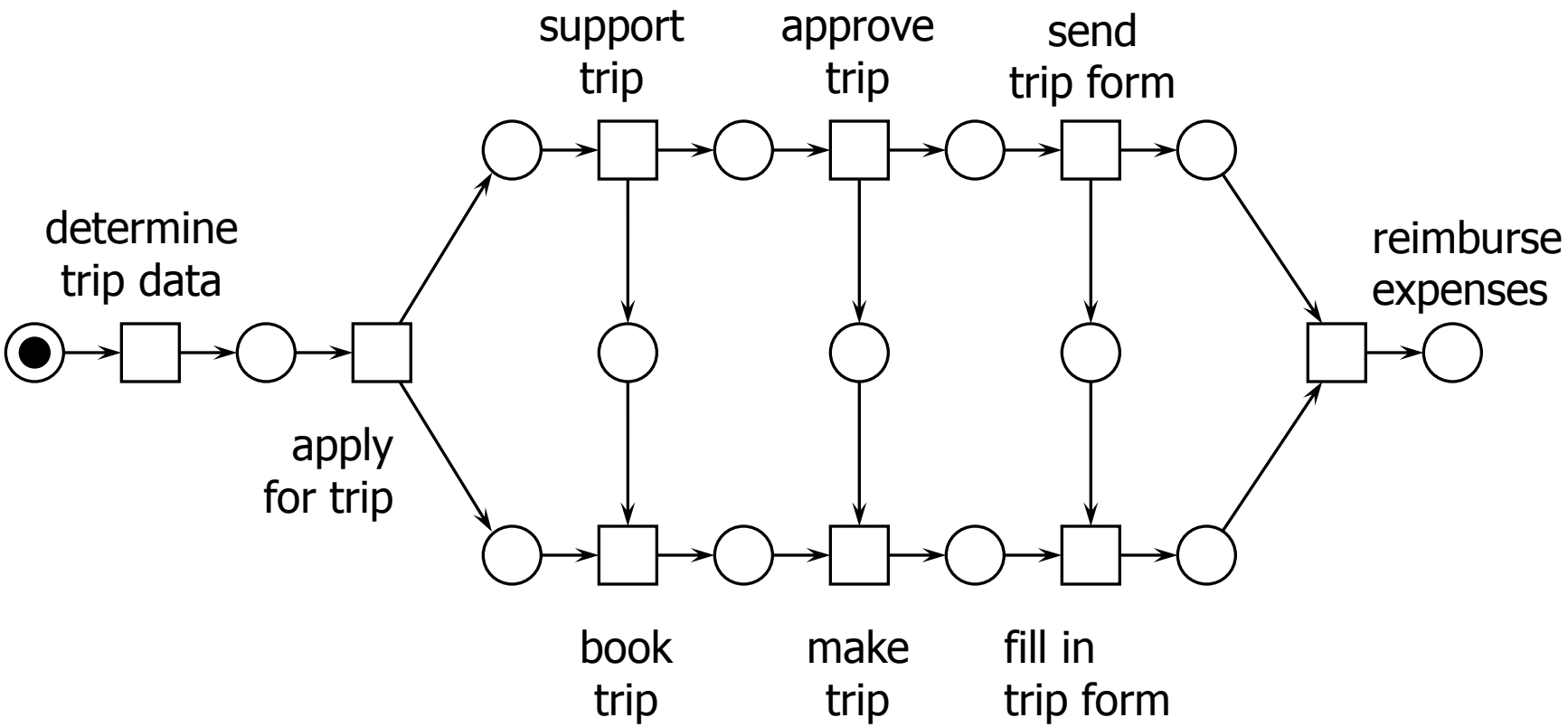

Activity / Task

DTU Compute
Department of Applied Mathematics and Computer Science
Ekkart Kindler

An **task** of a business process is an atomic work step that, on the given level of abstraction, cannot be split into more detailed steps.

NB: „Atomic“ is with respect to some given or chosen level of abstraction.

When the task is executed, we call it activity (instance of a task).

Task

Examples:

- fill in an application form
- support trip (signature of superior)
- send a reminder
- take a blood-sample
- pay out a credit
- …

Observations

DTU Compute
Department of Applied Mathematics and Computer Science
Ekkart Kindler

4. The level of automation of a task varies:
   - Some tasks/activities can be executed **fully automatically**.
   - Some tasks/activities can be executed **semi-automatically**.
   - Some tasks/activities can be executed **manually** only.

Business Trip: Documents

DTU Compute
Department of Applied Mathematics and Computer Science
Ekkart Kindler

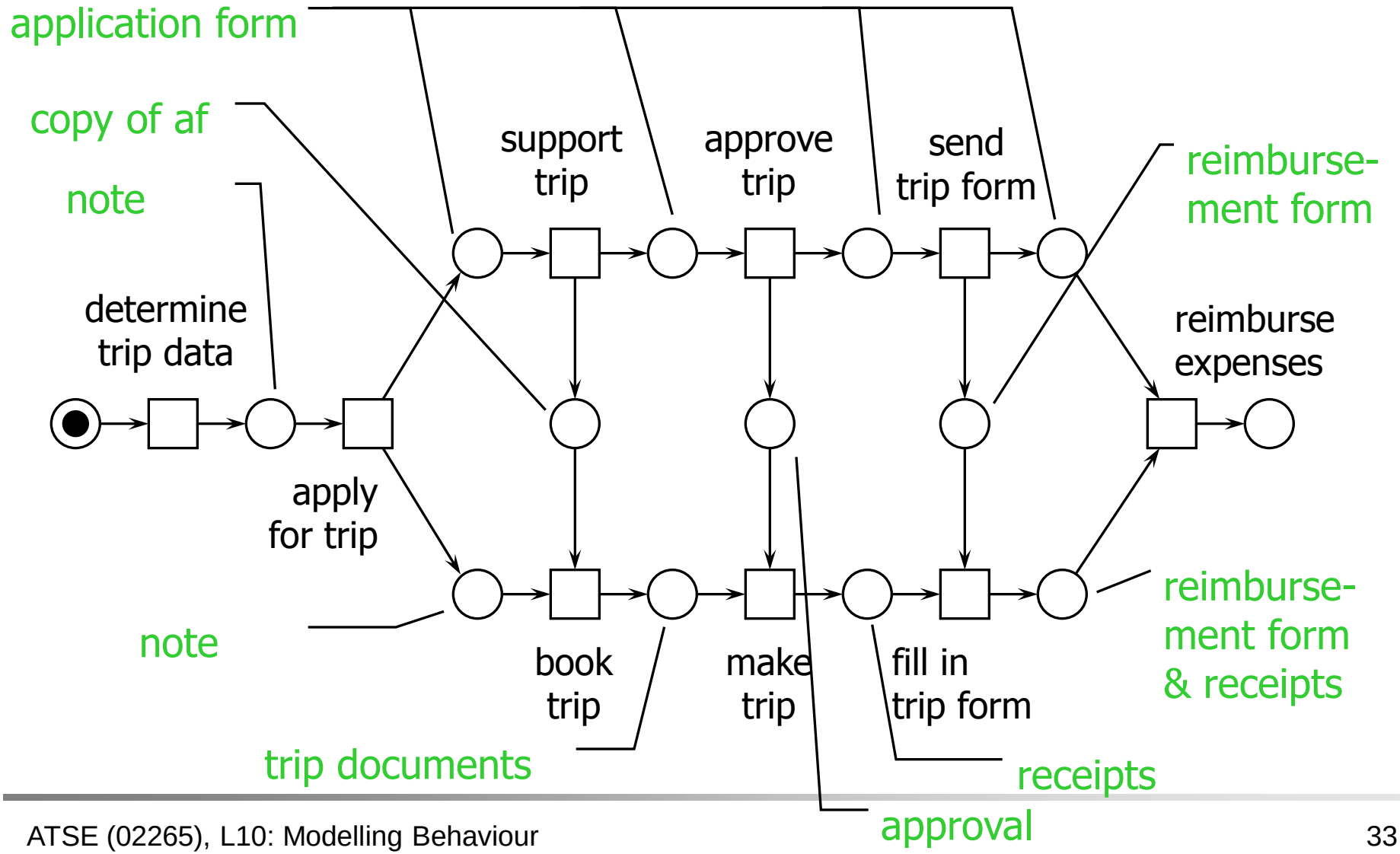

Document

In a business process, **documents** are created, used, and changed.

These documents help to exchange information among different activities of the same business process and among different business processes.

Document

DTU Compute
Department of Applied Mathematics and Computer Science
Ekkart Kindler

Examples:

- Applications
- Approvals
- Contracts
- Reminders
- Receipts
- Tickets, ...
- Notes

Remarks

- Documents can be in electronic form or on paper.
- We use documents as a modelling concept; we abstract from its physical presentation.

In work flow management systems, documents will be maintained in a database (etc.)

Tasks and Documents

DTU Compute
Department of Applied Mathematics and Computer Science
Ekkart Kindler

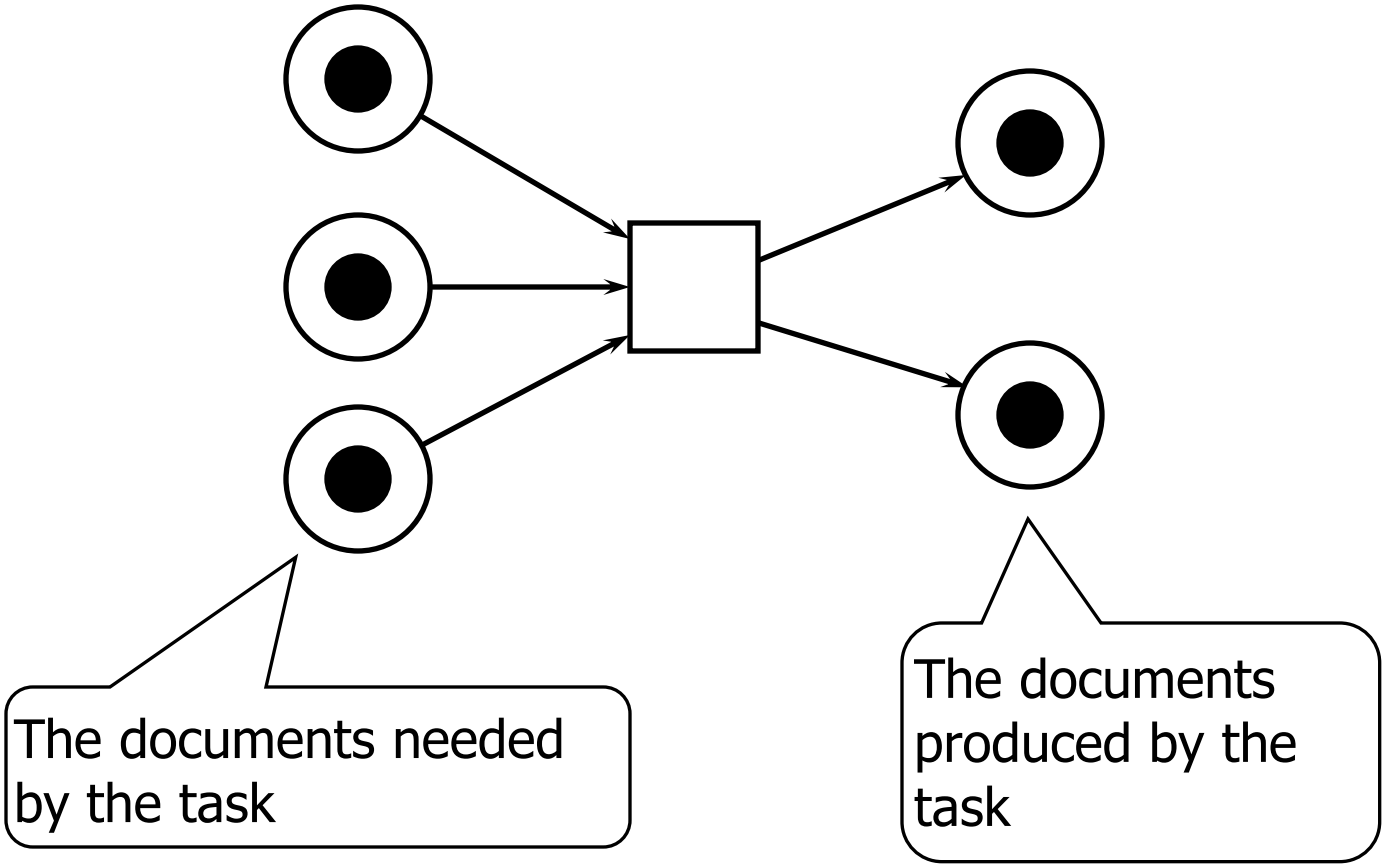

Business Trip: Agents

DTU Compute
Department of Applied Mathematics and Computer Science
Ekkart Kindler

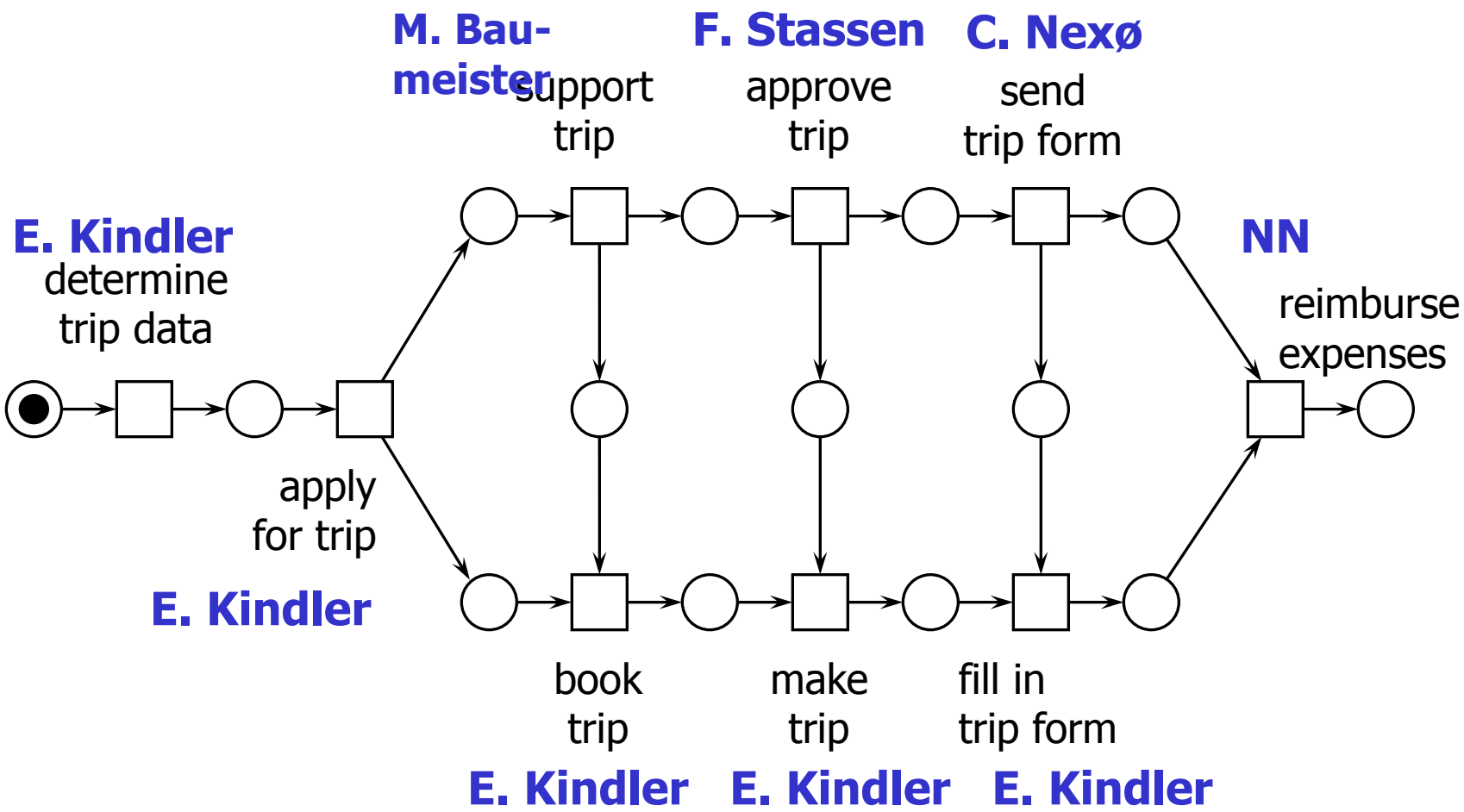

Resources and Agents

DTU Compute
Department of Applied Mathematics and Computer Science
Ekkart Kindler

A **resource** is a means necessary for executing an activity.

When the resource is a person, we call the resource an **agent**.

Resources and Agents

DTU Compute
Department of Applied Mathematics and Computer Science
Ekkart Kindler

Examples:

- Persons (E. Kindler, F. Stassen, ...)
- Printers
- Computers
- Devices (e.g. for analysing blood)
- ...

Remarks

- In a concrete instance of a business process, there are concrete resources and agents –keeping track of the involved resources is good for documentation purposes.

- In a model of a business process, concrete resources and concrete agents are problematic (business trip, vacations, sick leave, etc.)

Roles

DTU Compute
Department of Applied Mathematics and Computer Science
Ekkart Kindler

A **role** is the capability (or competence) of an agent or a resource to execute specific activities.

The same resource can have several roles.

Roles can be considered as a classification of resources.

Roles

Examples:

- research assistant
- superior
- director
- doctor
- clerk
- head of department
- ...

Re: Business Trip

DTU Compute
Department of Applied Mathematics and Computer Science
Ekkart Kindler

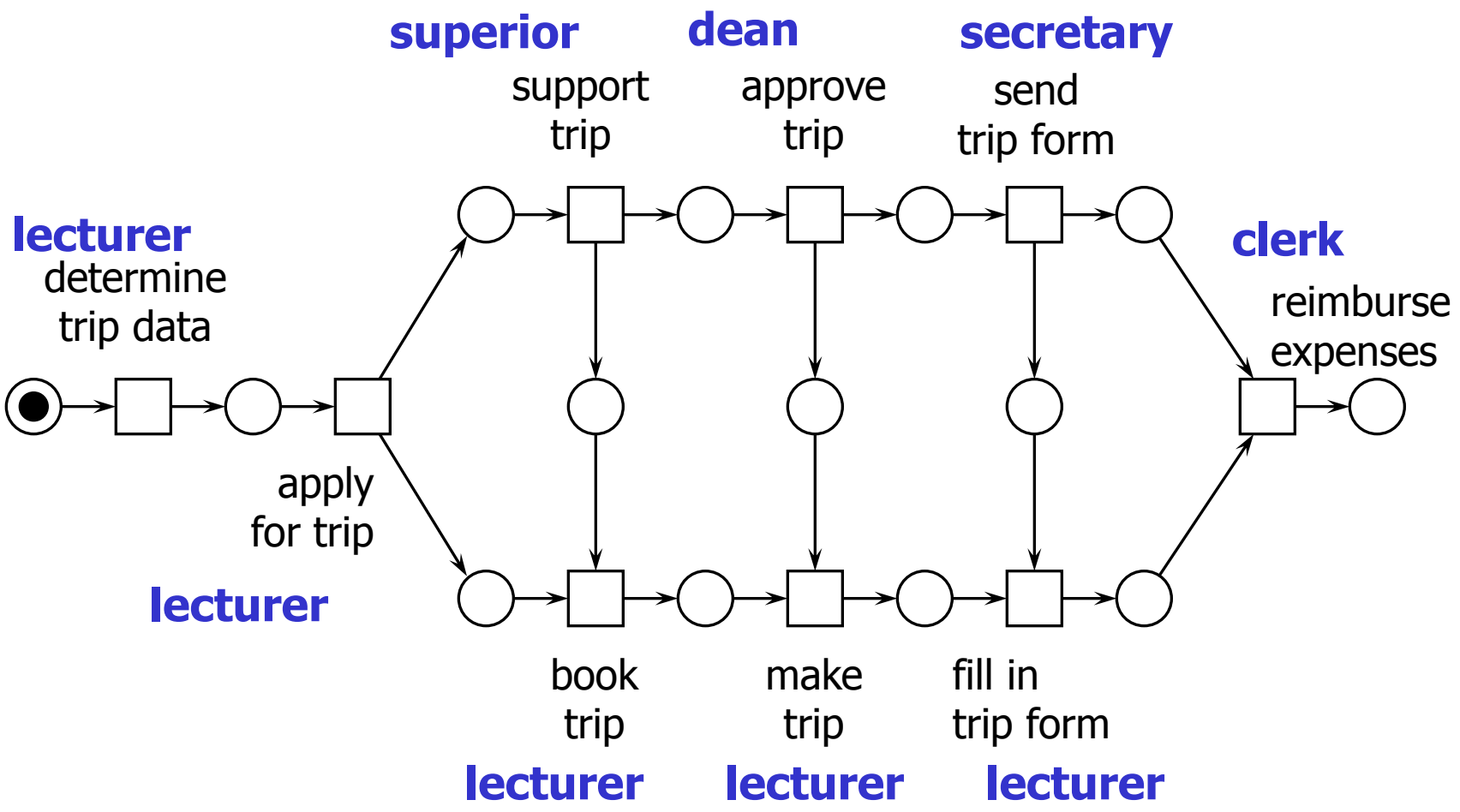

Triggers

DTU Compute
Department of Applied Mathematics and Computer Science
Ekkart Kindler

Activities can be triggered in different ways:

- automatically
- by an agent

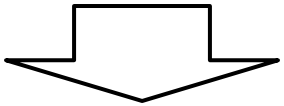

- by an external event

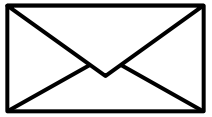

- by time(out)

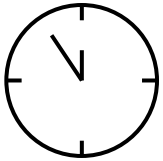

Example: Complaint processing

DTU Compute
Department of Applied Mathematics and Computer Science
Ekkart Kindler

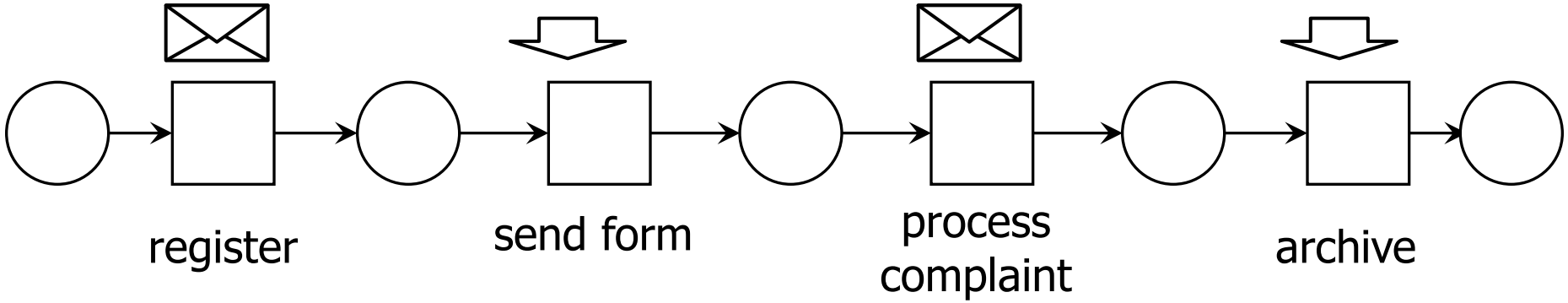

Problem:

What if the customer never returns the form?

Example: Complaint processing

DTU Compute
Department of Applied Mathematics and Computer Science
Ekkart Kindler

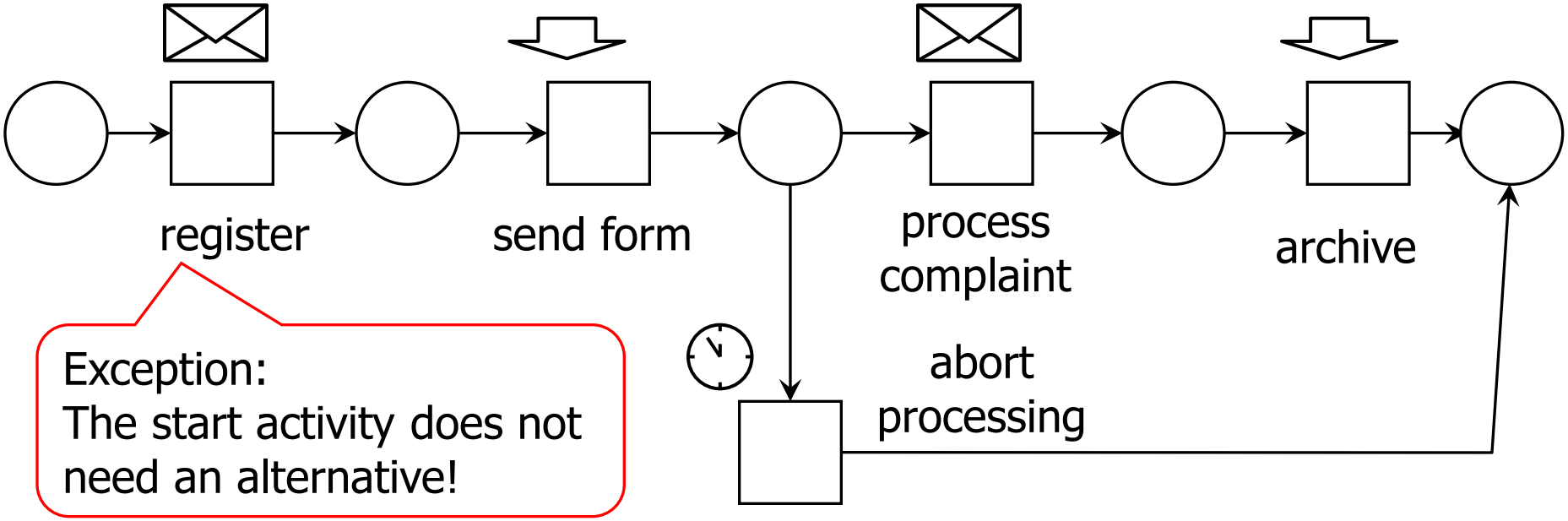

Exception:
The start activity does not need an alternative!

Solution:

Externally triggered activities are equipped with an non-external alternative!

Aspects of Business Processes

DTU Compute
Department of Applied Mathematics and Computer Science
Ekkart Kindler

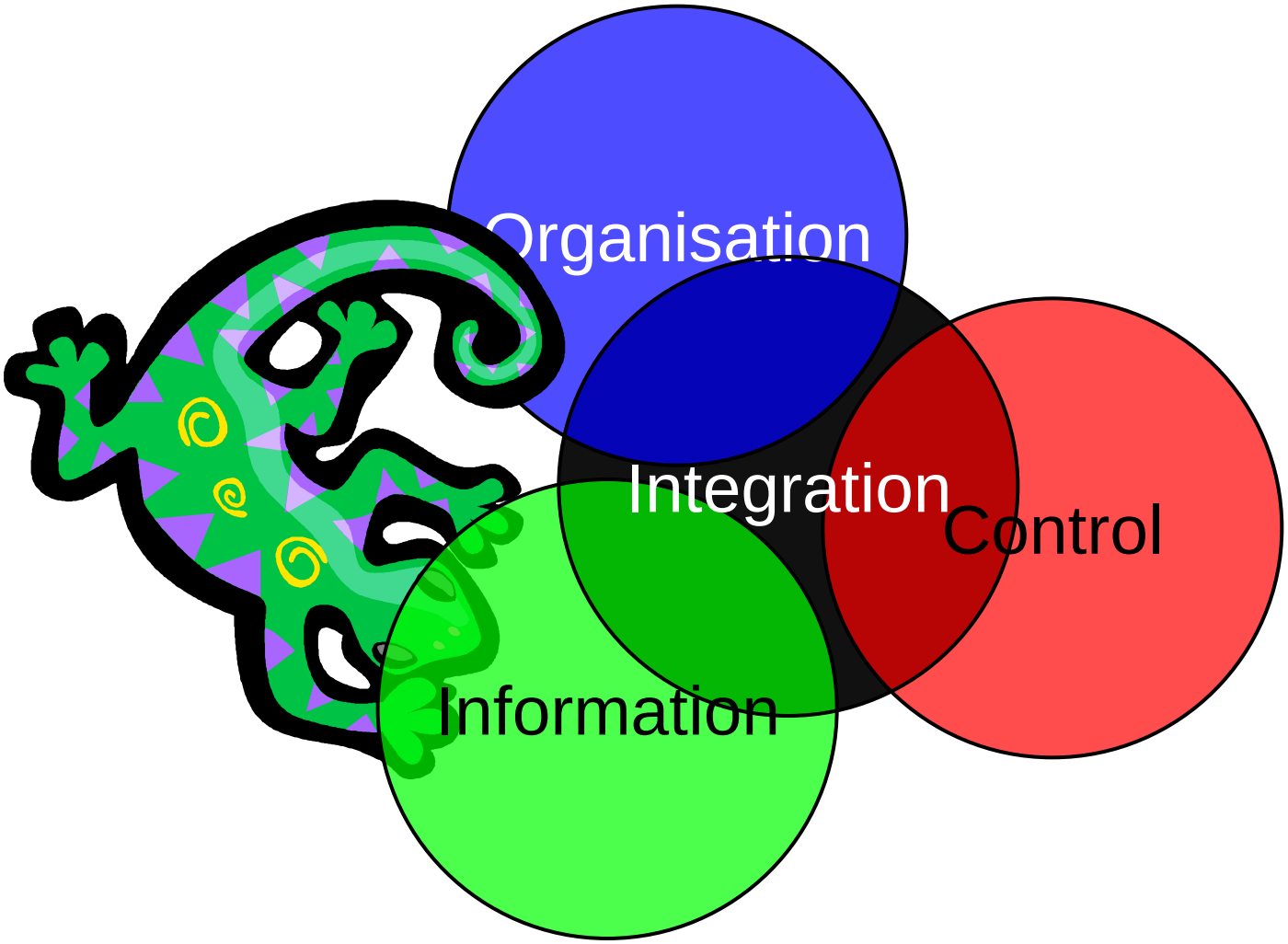

4. Discussion

DTU Compute
Department of Applied Mathematics and Computer Science
Ekkart Kindler

- There are notations for, virtually, any kind of behaviour!
- Actually, hundreds of them!
- So, why is there a problem with modelling behaviour?

Problems

DTU Compute
Department of Applied Mathematics and Computer Science
Ekkart Kindler

The problem is not modelling behaviour, but modelling it in such a way that these models:

- can be (easily) integrated with the structural models
- with other behavioural models of the same kind
- with other behavioural models of different kind
- with existing code
- other systems

SOA partially deals with these problems; but there are many left.

and such that they can be automatically executed or code can be generated from them.

Reasons

Fine grain vs. coarse grain behaviour
Intra-object vs. inter-object behaviour
Reactive vs. transformational behaviour

Coordination of vs. computation
Synchronisation vs. invocation

Events vs. methods

Processes vs. classes
Concurrency vs. threading